REVISION DATA		
REV	DESCRIPTION	DATE
A0	NEW DRAWING	2015-07-06

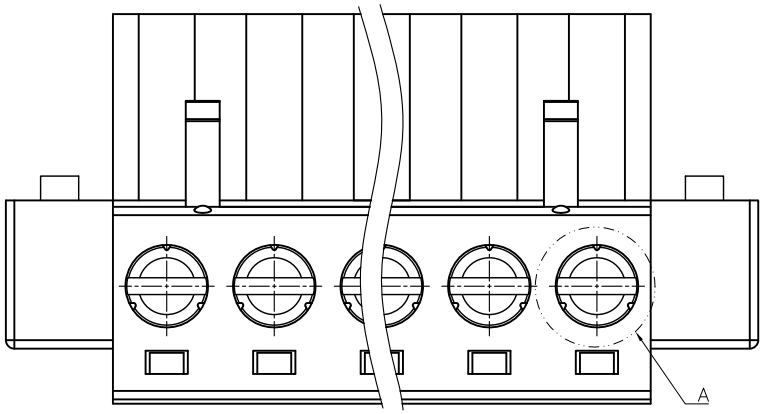

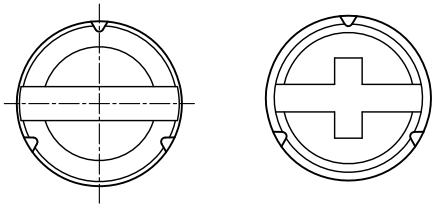

一字　　十字

Technical Data:
Material:
Contact(metal housing): Brass Machined(Option)
Terminal screw: Steel Galvanized and chromatized or Nickel plated or Tin plated(standard)(optian)
Wire guard: PhBZ,Tin plated.
PLATED
Contact(metal housing): Cu40u"+Ni160u"
Terminal screw: Nickel plated or Tin plated(standard)(optian)
Wire guard: Cu40u"+Ni80u"+Sn200u"
Insulator body(housing): Polyamide(Glass filled)(UL94V-0)
Standard:PA66
Electrical
Voltage rating: 250VAC
Current rating: 10 Amps/way max
Contact resistance: 20mΩ(max)
Insulation resistance: 5000MΩ/1000V
Withstanding Voltage: 1500VAC(1min) Test time=60sec/1pcs
Wire range: 12-26AWG
Mechanical:
Torque: 4.3kgf.cm/M3
Operating temperature: -40°C to +120°

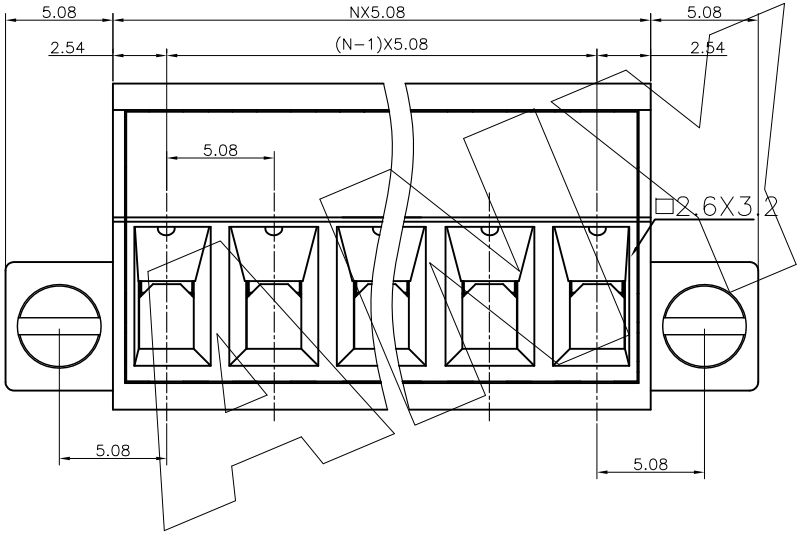

N=Number of contacts

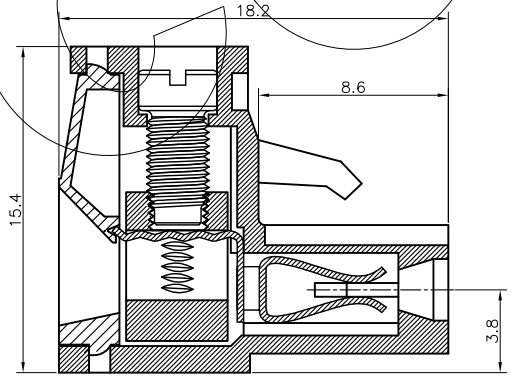

AJ-X XX-X X 0

- X: 5 = 5.0mm; E = 5.08mm
- XX: 02 To 24; 02 To 24
- X: 1 = "-"Screw; 2 = "+"Screw
- 0: 5 = Green; 6 = Blue; A = Black

ANYCONN

ANYCONN® 东莞市恩康电子有限公司
www.enkcom.com DONGGUAN ANYCONN ELECTRONICS CO.,LTD

TOLERANCE	PROJECTON		TITLE: AJ Pitch 5.08mm Auricled Series			
ANGLE ±5°	DATE :	2015-07-06				
X.XXX ±0.05	DRAWN :	Songjun	PART NO: AJEXX1X0A			
X.XX ±0.10	CHECKED :		DRAWING NO:			
X.X ±0.15	APPROVED :		REV: A0	UNIT: mm	SCALE: 1:1	SIZE: A4
X. ±0.25						