REVISION DATA		
REV	DESCRIPTION	DATE
A0	NEW DRAWING	2008-01-03

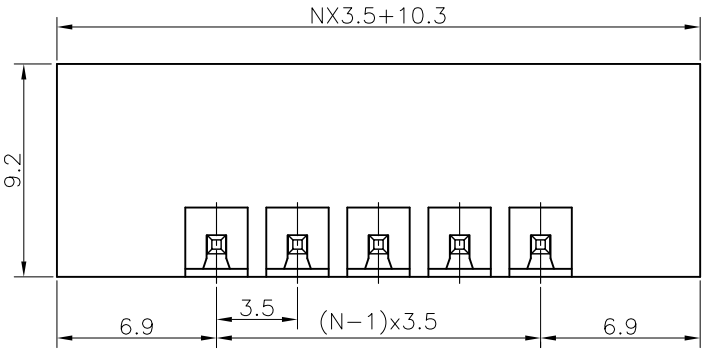

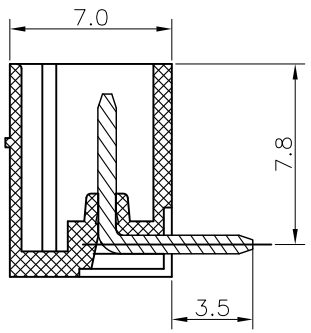

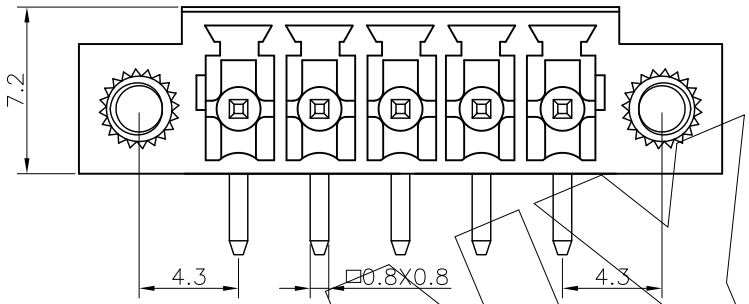

N=Number of contacts

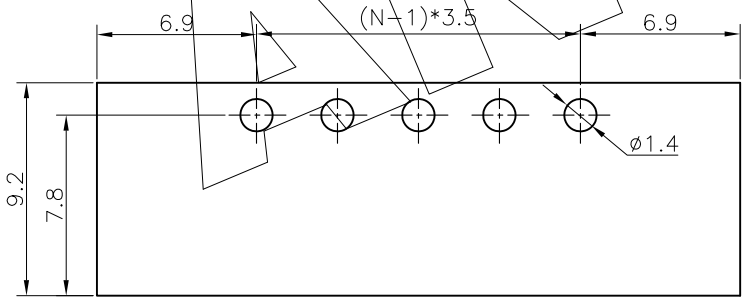

P.C.B. LAYOUT

Technical Data:

Material:
Solder Pin: Brass with Tin plated
Insulator body(housing): Polyamide (Glass filled)(UL94V-0)
Electrical
Voltage rating: 250VAC
Current rating: 8A.
Insulation resistance: 500MΩ at DC 500V
Withstanding Voltage: AC 1200V(1min)
Mechanical:
Using temperature Range: -40°C to +105°C
Soldering temperature:+250°C,5seconds Max.

EQ- X XX -0 X X

- X: 3 3.5mm; C 3.81mm
- XX: 02 To 24 — 2Pin To 24Pin
- X: 5 Green; 6 Blue; A Black
- X: 3 3.50mm

ANYCONN

ANYCONN® 东莞市恩康电子有限公司
www.enkcom.com DONGGUAN ANYCONN ELECTRONICS CO.,LTD

TOLERANCE	PROJECTON		TITLE: EQ Series 3.5mm Right Angle Type			
ANGLE ±5°	DATE :	2008-01-03				
X.XXX ±0.05	DRAWN :	LIJING	PART NO: EQ3XX0X3B			
X.XX ±0.10	CHECKED :		DRAWING NO: AN-EQ3XX0X3B			
X.X ±0.15	APPROVED :		REV: A0	UNIT: mm	SCALE: 3:1	SIZE: A4
X. ±0.20						